CURTIS

A KOHLER COMPANY

Motor Controllers

AC F4-AE

AC Motor Controller with VCL

AC F4-AE

Superb Performance

The Curtis Model AC F4-AE Motor Controller provides accurate speed and torque control of 3-phase AC induction, PMAC and BLDC motors.

Model AC F4-AE includes dual ARM Cortex microprocessors that provide a category 2 designated architecture for functional safety, as well as efficient motor control and flexible system control. The AC F4-AE is designed for light on-road vehicles such as auto rickshaws, golf carts, multi-person vehicles (MPVs) and motorbikes.

Model AC F4-AE is CANopen compliant. The controller provides flexible I/Os with mappable pins and inputs for a motor position sensor.

FEATURES

Fit for Purpose

- Field-oriented motor control algorithms maintain optimal performance for 3-phase AC motors under all operating conditions.
- Real-time motor torque and power estimates optimize vehicle-level power.
- Customizable power limiting maps minimize motor heating and provide consistent performance over varying states-of-charge.
- Rugged housing with a small footprint for the power rating.
- Heavy-duty busbars for motor and battery connectors.
- Sealed, 35-pin AMPseal I/O connector.
- Impervious to most oils, solvents, degreasers and other chemicals often encountered by industrial vehicles.
- IP67 environmental protection as per IEC 60529.
- Exceeds global conformance requirements for functional safety, electrical safety and EMC.
- UL583 recognized component.

Motors

- Closed-loop current and voltage-compensated output driver control.
- Works with any AC induction, PMAC or BLDC motor.
- Motor auto-characterization simplifies on-truck pairing with different induction motor types.
- Comprehensive library of induction and PMAC motor types stored in controller memory.
- Supports the following types of motor position sensors:
  - Quadrature encoders with open collector outputs
  - Three-line quadrature encoders with open collector outputs
  - Sine/cosine position sensors
  - Hall sensors

You Feel It When You Drive It— Maximum Torque, Minimum Losses, Full Control

- Curtis' renowned field-oriented control algorithms and PWM switching technology assure maximum torque and system efficiency across the entire torque/speed spectrum.
- Smooth and predictable drive control that only Curtis can deliver.

AC F4-AE

FEATURES continued

Get More Out of Your Battery—Regardless of the Technology

- High-efficiency means more of your battery's energy is converted to motor output power.
- Configurable overvoltage and undervoltage protection parameters.
- Wide operating voltage range allows use with cell chemistries such as lithium ion.
- Configurable CANbus and VCL allow easy integration with the Battery Management Systems (BMS) typically found on lithium battery packs.

Powerful Dual Microprocessors

- Dual-micro architecture achieves category 2 functional safety under EN ISO 13849-1:2015.
- Blazing processor speeds for precise regulation of voltage, frequency and current.

Customize Your Vehicle with VCL

- The Curtis Vehicle Control Language (VCL) enables Curtis AC Motor Controllers to operate as system controllers, eliminating the need for costly additional controllers.

Flexible I/O

- All I/O pins are multi-function, and can be configured to provide up to:
  - Twenty digital inputs
  - Thirteen analog inputs
  - Two potentiometer sources
  - Three output drivers. Driver 4 supports a 3A load for an EM Brake; the other drivers are 2A.
  - One motor temperature sensor
  - +5V and +12V external power supplies
  - One motor position sensor
  - One analog output

Comprehensive CAN Capabilities

- Configurable 11 or 29 bit protocol support for CANopen or J1939 use.
- Plug and play support for Curtis CAN displays and CAN tiller heads from leading manufacturers FREI and REMA.
- Fully CANopen compliant per CiA 301.
- Acts as a "CAN interpreter" that allows third-party CAN devices with differing profiles to work on the same CANbus.

Diagnostics

- Status LEDs for at-a-glance system troubleshooting.
- Thermal cutback, warning and automatic shutdown protect the motor and controller.
- Error logging, fault history and CAN Emergency Messages.

CAN-based Programming

- Programmable over the CANbus.
- Supports most CAN-based service tools used by major industrial truck manufacturers worldwide.
- Develop, configure, optimize and debug vehicle systems with the Curtis Integrated Toolkit.

SYSTEM ACCESSORIES

Curtis Models 3301T and 3401T

Models 3301T and 3401T are CAN-based color LCD status displays. The 3301T and 3401T enable vehicle operators to view vehicle status in any lighting condition. Either model is an ideal partner to Model AC F4-AE.

- Screen sizes:
  - Model 3301T: 3.5″
  - Model 3401T: 4.3″
- I/Os and CAN functionality enable vehicle management, monitoring and control in a single integrated unit.
- Face is sealed to IP65; rear is sealed to IP65 for electronic components.
- 12–96V nominal operating voltage range.
- CE compliant.
- UL583 recognized component.
- Optional heater.

For more information, see the Curtis Instrumentation page.

The Curtis Integrated Toolkit

The Curtis Integrated Toolkit (CIT) provides a suite of development and diagnostic tools for working with CAN systems that use Curtis and third-party CAN devices. CIT consists of the following tools:

- **Launchpad**
  Starting point and project editor.
- **Programmer**
  Configure parameters, view monitor values, and view active faults and the fault history.
- **TACT**
  Stand-alone oscilloscope and data-logging tool.
- **VCL Studio**
  Editor and compiler for VCL software.
- **Menu Editor**
  Create and modify programming menus.
- **Package & Flash**
  Load your software into CAN devices.

The Curtis Integrated Toolkit is compatible with many leading USB>CAN interface dongles from Peak, Kvaser, iFAC, Sontheim, etc. For more information, see the Curtis Programming page.

MODEL CHART

Model	Nominal Battery Voltage	Current Rating [RMS 1 minute]	Current Rating [RMS 1 hour]
AC F4-AE 48-400-*XXX*	36–48V	400A	160A

DIMENSIONS (mm)

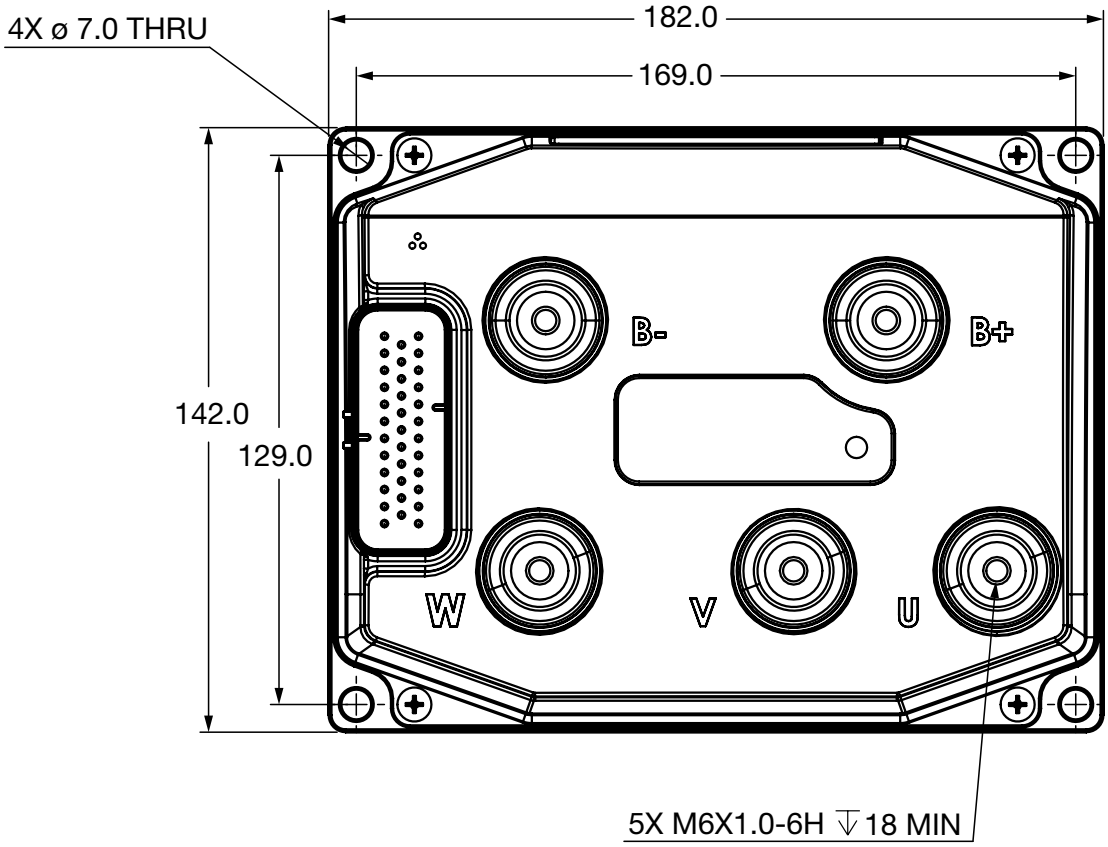

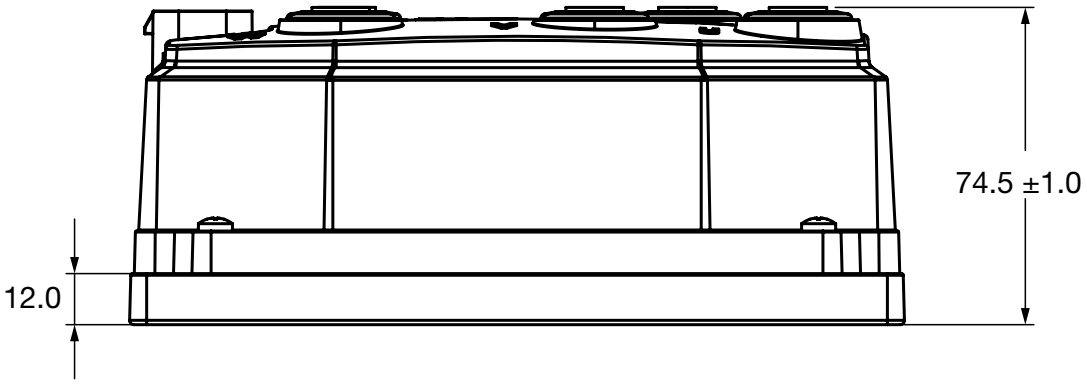

CONNECTOR WIRING

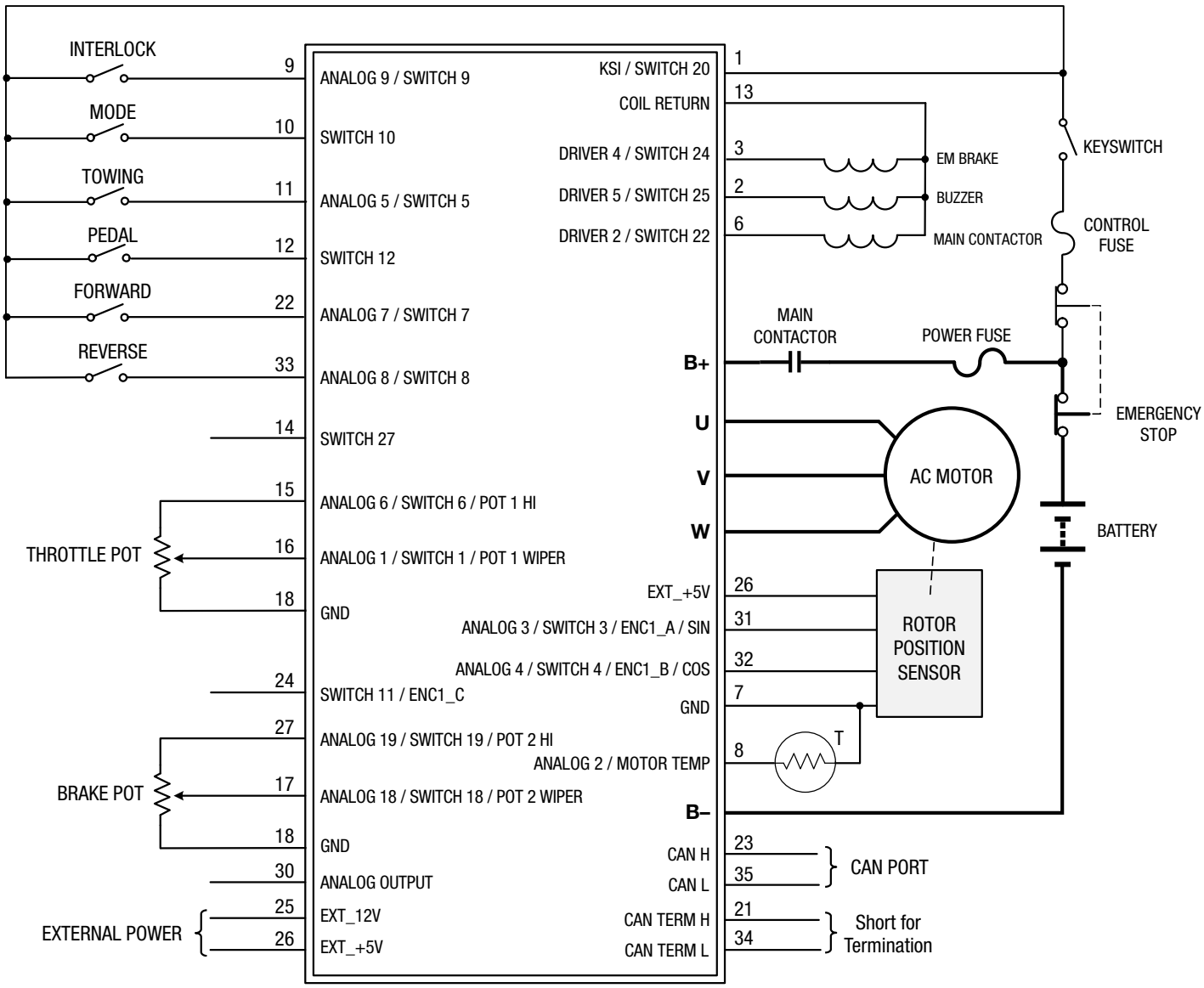

PINOUT CHART

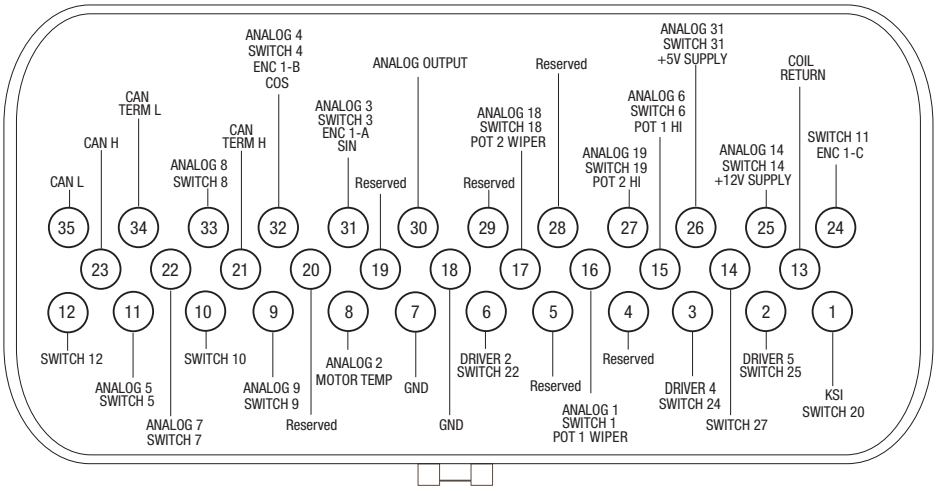

SPECIFICATIONS

Nominal Voltage	36–48V
Minimum Voltage	18V
Maximum Voltage	63V
Design Life	8000 hours
PWM Frequency	10kHz
Maximum Controller Output Frequency	500Hz
Electrical Isolation to Heatsink	500VAC
Storage Ambient Temperature	–40°C to 85°C
Operating Ambient Temperature	–40°C to 50°C
Thermal Cutback	Controller linearly reduces the maximum current limit when the internal heatsink temperature is between 85°C and 95°C; complete cutoff occurs above 95°C and below –40°C.
Ingress Protection	IP67
EMC	Designed to the requirements of EN 12895:2015+A1:2019
Safety	Designed to the requirements of EN ISO 13849-1:2015
UL	UL recognized component per UL583
ECE R10	Certified for ECE R10
Weight	2.0 kg
Dimensions W x L x H	142 mm x 182 mm x 75 mm
Mounting	4x M6 bolts
Power Connections	5x M6x1.0

Note: *Regulatory compliance of the complete vehicle system with the controller installed is the responsibility of the vehicle OEM.*

WARRANTY

Two year limited warranty from time of delivery.

The Curtis Difference
You feel it when you drive it

50395 REV E 01/24